SALIENT™

COMPACT INJECTION SYSTEM

mobile
compact
cordless

IMAXEON™

About Imaxeon

Imaxeon Pty Ltd has been a designer and manufacturer of high quality, innovative medical devices for over twenty-five years, with contrast injection systems a core product competency.

All Imaxeon products incorporate the latest technology and are designed to be easy to use while still delivering the key features found in more complicated systems.

The SALIENT™ Contrast injection system has, like all Imaxeon products, been engineered to deliver safety, reliability and performance with superior lifetime value.

USER FRIENDLY INTERFACE

- Intuitive icon-driven user touch screen
- Easy contrast loading
- On-line or off-line syringe filling

COMPLETE RANGE OF CONSUMABLES

- Coiled extension tube for safety and convenience
- Completely transparent syringe with fill tube included
- FluiDots® show whether syringe is filled at a glance

POWERFUL INFRARED REMOTE

- Injector can be operated safely from the control room
- Proven reliability in over 1000 worldwide sites
- Simple inject and stop functions

SINGLE ACTION SYRINGE LOADING

- Single action loading, for maximum ease of use
- Syringe is simply pushed into bayonet and rotated 90°

OFF LINE FILLING SYSTEM

- Saves valuable scan room time
- Enables syringe pre-filling
- Flexible filling volume

COMPACT ■ MOBILE ■ RELIABLE

SALIENT™
CONTRAST INJECTION SYSTEM

EASY TO USE

- Intuitive and easy to read icon-driven touch screen
- Streamlined, flexible and customisable workflow
- Single action syringe loading
- Flexible contrast filling options

SAFE - FOR PATIENTS AND OPERATORS

- Simple cordless infrared remote control allows operation from the control room
- Battery-powered for patient and user safety: no dangerous cords or cables to trip over

FLEXIBLE, RELIABLE PERFORMANCE

- 300 psi to deliver 10 ml/s flow rate
- Simple protocol management
- Automatic self-check upon power-up
- Simultaneous operation and battery charging

ECONOMICAL

- Engineered to deliver superior value: all the features you need without unnecessary complexity
- Easy to clean, service and maintain
- Complete range of value consumables

MOBILITY AND CONVENIENCE

- Light weight and easy to move
- No cords or cables to limit movement
- Large lockable wheels
- Small footprint to save space

IMAXEON™

IMAXEON SALIENT™ CONTRAST INJECTOR SPECIFICATIONS OVERVIEW

Functional

Maximum pressure	300 psi
Flow rate	0.1 to 10 ml/s
Maximum volume	190 ml
Multi-phase protocols	Up to four phases Storage for 20 different named protocols
Manual fill rate	Up to 10 ml/s
Auto fill rate	Up to 10 ml/s

Controls

Base	Line power IEC Inlet On/off switch
Head	5.7" LCD touch screen Arm button On/off soft switch
Hand switch	Inject now/stop
Foot switch	Inject now/stop
Remote control	Inject now/stop

Mechanical

Weight	22.9 kg
Height	1200 mm
Floor area	500 mm x 500 mm
No. of wheels	4 castors, all individually locking

Electrical

Line voltage	100 – 230 VAC
Line frequency	50/60 Hz
Battery operation	Dual batteries, sealed lead acid
Mains power operation	Simultaneous operation and battery charging
Contrast heat maintainer (optional)	37°C +/- 2°C, 5W

Ordering Details

PART NAME	PART NO
Single injector	DC009S
Syringe	ZY6320
Tube, single	ZY5151
Heat maintainer	DC022
Foot switch	SF0004
Hand switch	SF0005
Wall loader	MDL001

DIMENSIONS

Side View

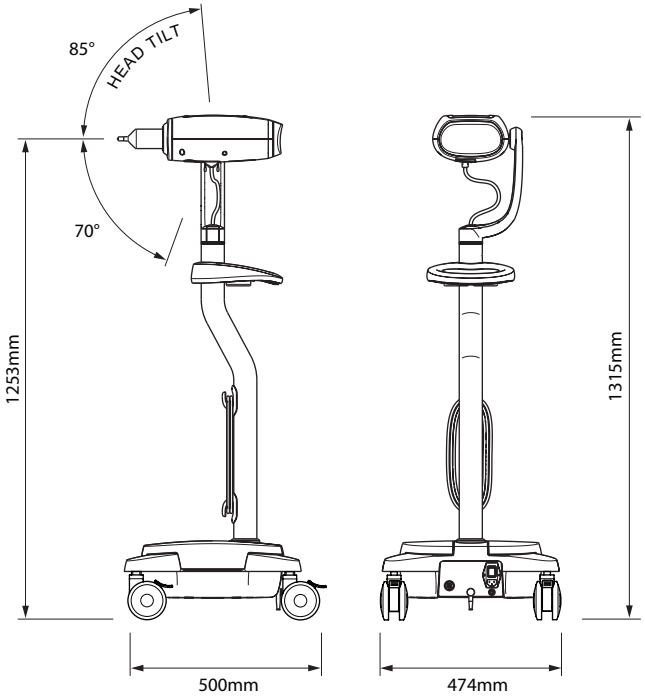

Top View

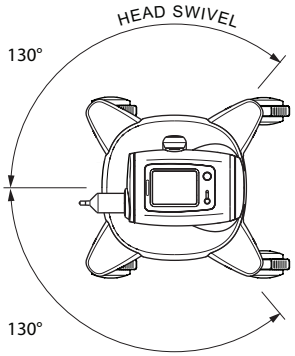

All Imaxeon products feature a one-year warranty.
Visit our website www.imaxeon.com

Imaxeon Pty Ltd is a subsidiary of MEDRAD Inc. MEDRAD is a federally registered trademark of MEDRAD, Inc. USA. Salient is a trademark of MEDRAD, Inc. Used by permission of MEDRAD, Inc. In the interest of continually improving product quality the specifications shown on this brochure may change at the discretion of the manufacturer.

A Quality Company
EN ISO13485:2003/AC:2009

CE 0123

IMAXEON™

Imaxeon Pty Ltd
ABN 93 093 950 906

Rydalmere Metro Centre Unit 1, 38-46 South St Rydalmere NSW 2116 Australia
PO Box 150 Rydalmere BC NSW 1701 Australia

t + 612 8845 4999
f + 612 8845 4936

e info@imaxeon.com
w www.imaxeon.com

BR040005-01 SalSn_ENG6.2_JUL11